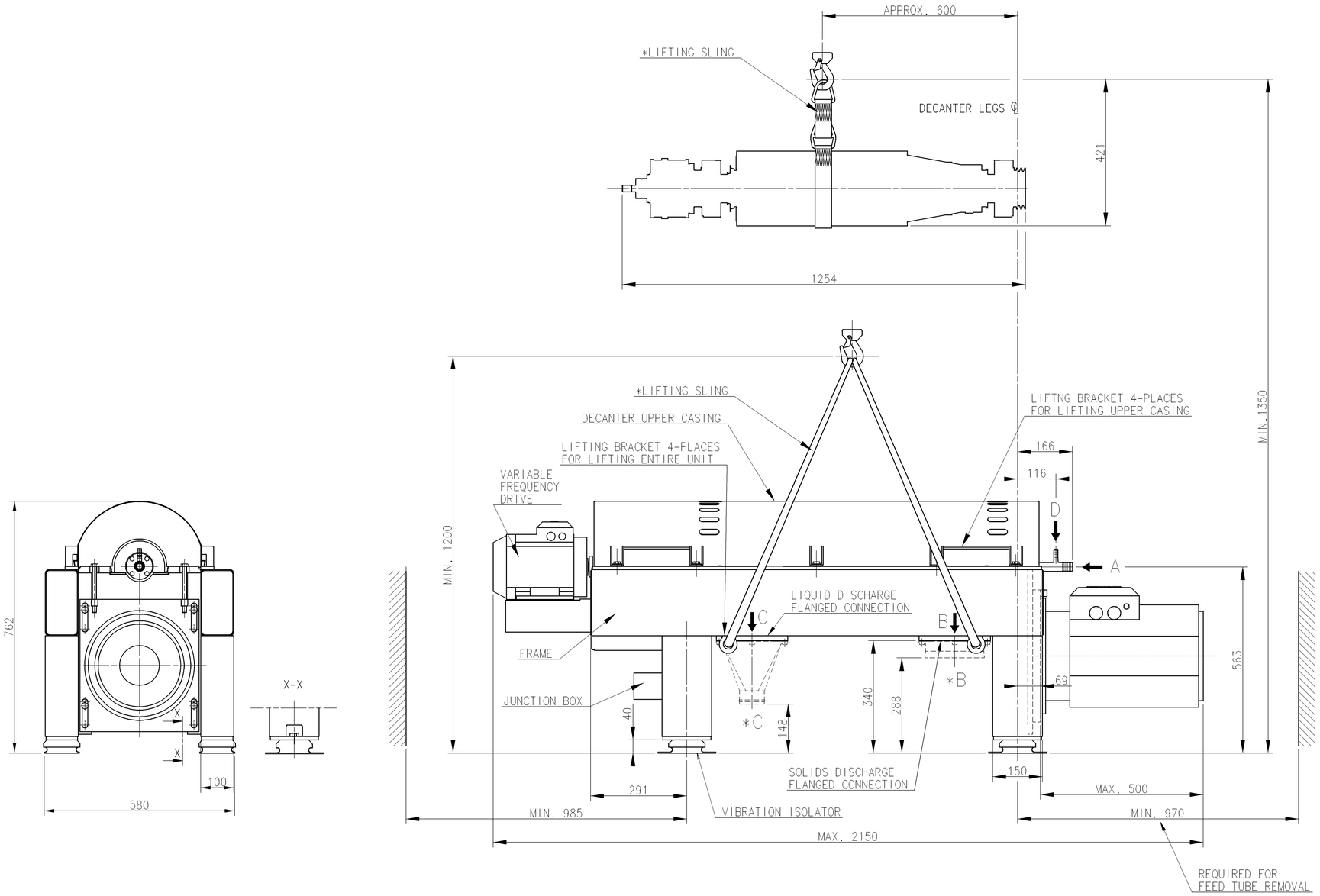

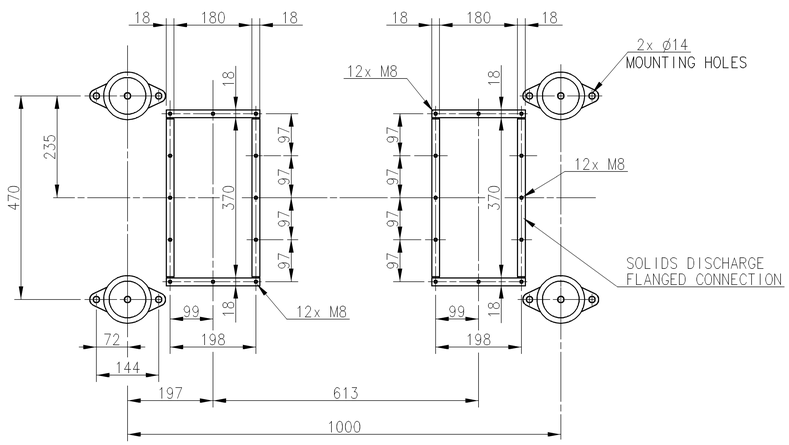

APPROXIMATE WEIGHTS:

TOTAL WEIGHT OF EMPTY DECANTER.....	375 kg / 825lbs
ROTATING ASSY INCL. PILLOW BLOCKS.....	130 kg / 290lbs
COMPLETE FRAME ASSY EXCL. MAIN MOTOR AND ROT. ASSY..	160 kg / 352lbs
MAIN MOTOR.....	73 kg / 160lbs
UPPER CASING.....	24 kg / 53lbs
GEAR BOX.....	20 kg / 44lbs
MIN. CRANE CAPACITY FOR LIFTING OF ROTATING ASSEMBLY:	150 kg / 330lbs

LOADING DATA:

1. MAX. STATIC LOAD

   A-VERTICAL..... 3500 N
   B-HORIZONTAL..... 0 N

2. MAX.DYNAMIC LOAD AT RUN DOWN

   (ADD TO STATIC LOAD)
   A-VERTICAL..... ±1000 N
   B-HORIZONTAL..... ± 500 N

3. MAX.DYNAMIC LOAD AT OPERATING SPEED

   A-VERTICAL..... ±100 N
   B-HORIZONTAL..... ±100 N

ALL LOADS ARE EVENLY DISTRIBUTED ON THE VIBRATION ISOLATORS

CONNECTION:

	DIMENSION/TYPE
A FEED.....	Ø25.4 (1") HOSE CONNECTION
B SOLIDS OUTLET.....	RECTANGULAR FLANGE
*B SOLIDS OUTLET.....	173 x 363
C LIQUID OUTLET.....	RECTANGULAR FLANGE
*C LIQUID OUTLET.....	Ø75 HOSE CONNECTION
D POLYMER ADDITION.....	Ø12.7 (1/2") HOSE CONNECTION

NOTES:

1. ALL CONNECTIONS MUST BE FLEXIBLE.
2. FOR PROPER VENTING OF DISCHARGE HOPPERS REFER TO THE INSTSLLATION DRAWING. IMPROPER VENTING CAN LEAD TO LEAKAGE PROBLEMS.
3. CUSTOMER IS RESPONSIBLE FOR ANCHORING.
4. FOR FURTHER INFORMATION, SEE INSTALLATION DATA MANUAL AND INSTALLATION DRAWING.

* OPTIONAL EQUIPMENT

This document and its contents are the exclusive property of Alfa Laval Copenhagen A/S. It may not be copied, distributed, transmitted or communicated to a third party, nor used for any other purpose than intended.

This document may constitute a controlled document within the scope of part of Alfa Laval Copenhagen A/S only and is not subject to automatic update.

TITLE: 'P1-100' REPLACES 'P2-100'			
Rev. No.	Date	Modified By	Appr.
1	140311	NKE	JOD

Item	Article No.	Name/Designation	Material

GEAR BOX 0.4 kNm

Title: DIMENSIONED DRAWING

P1 - 100

Alfa Laval
Alfa Laval Copenhagen A/S
SØBORG DENMARK

First angle projection	Surface roughness	Scale	Dept.	Date	Design Code
	$R_A \mu m$	1:5	GKU	080402	
		Format	Drawn	Appr. / Model	Document No.
		A0	DFø	KBSA / N	61242479